Chapter 1
Introduction

1 General Description 1-2
2 Platform Requirement 1-2
3 Definition and Abbreviation 1-3
4 Precautions 1-4

1 General Description

Itoh Configurator for EtherNet/IP and PROFINET (iCEP) is PC application to write creating ladder logic and setting for operation in IB controller.

iCEP has following features.

- Monitoring of ladder status.
- Communication setting
- Control the motor jog operation connected to IB card (forcible operation).
- Monitoring of error condition.
- Configuration and function assignment of motors connected to IB card.
- Firmware update connected to IB-E cards.
- Ladder logging

2 Platform Requirement

Hardware	OS：Windows7/10 CPU：Corei5 or over Memory：4Gbyte or over Net Framework4.5 or later Resolution：1024×768（XGA） Need a keyboard and mouse to use.

3 Definition and Abbreviation

Glossary of Itoh Denki

Word	Description
IB-E05B/IB-E06F (IB)	ITOH DENKI Ethernet/IP device that operates motor and is I/O device for like a sensor input.
IB-P01F/IB-P02F/IB-P03F	ITOH DENKI PROFINET device that operates motor and is I/O device for like a sensor input.
IB-E06-xx-FT	It is a Itoh Denki controller. 7A motor is connected to Motor A, and 4A motor is connected to Motor B.
iCEP	Configuration and ladder logic programming tool manufactured by ITOH DENKI.
JOG operation	Forcible motor run operation for system commissioning. Overrides logic in the IB.
LD Recorder	Configuration and ladder logic programming tool manufactured by ITOH DENKI. Up to two ladders program can be logged simultaneously.
Slave	It is device that operates by receiving command from master.
Master	It is device that control slave device.
Ladder logic	Ladder logic is a programming language that represents a program by a graphical diagram based diagram on the circuit diagrams of relay logic hardware.

Glossary of network

Word	Description
EtherNet/IP	EtherNet/IP is industrial open network that implements Common Industrial Protocol on Ethernet and TCP/IP.
IP address	IP address is a numerical label assigned to each device participating in a network that uses the Internet Protocol for communication.
MAC address	MAC address is a unique identifier assigned to network interfaces for communications on the physical network segment.
PROFINET	PROFINET is the industrial open network established by PROFINET association. It is mainly used as the control device manufactured by SIEMENS.
TCP/IP	It is basic communication protocol that translates data.
UDP/IP	UDP is a communications protocol that offers a limited amount of service when messages are exchanged between computers in a network that uses the Internet Protocol (IP).
Subnet mask	Subnet mask is a logically visible subdivision of an IP network. The practice of dividing a network into two or more networks is called subnetting.
Broadcast	A special type of multicast packet that all nodes on the network are always willing to receive.
Multicast	A packet with a special destination address, which multiple nodes on the network may be willing to receive.
Unicast	Unicast is the term used to describe communication where a piece of information is sent from one point to another point.

4 Precautions

Precautions for creating network

- There is the functions using multicast packet in iCEP. It may affect other device as it sends from the multicast packet from IB to all networks. Therefore, it is recommended to separate the network when using this application.

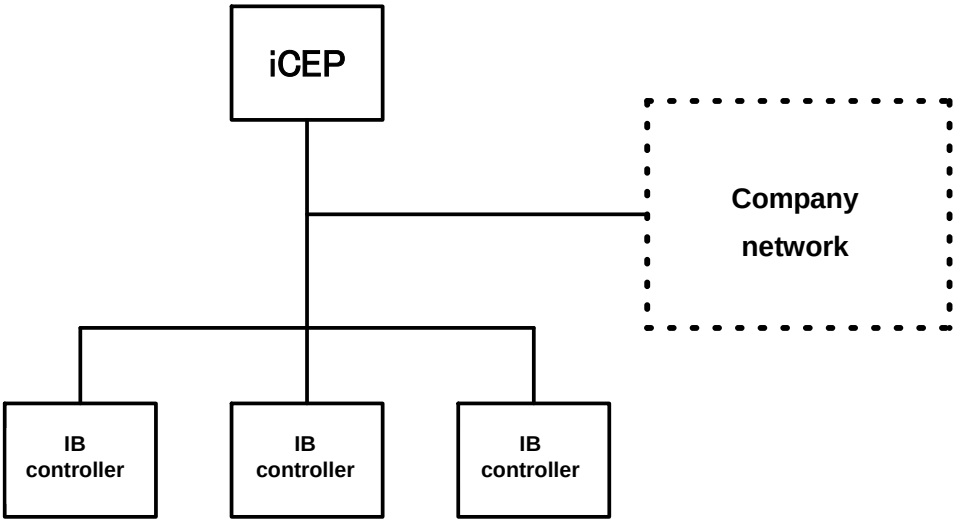

The packet of intra-company network and IB might be mixed in the above figure. Limit to flow unnecessary packets into the company network by setting a switch as below, as a countermeasure.

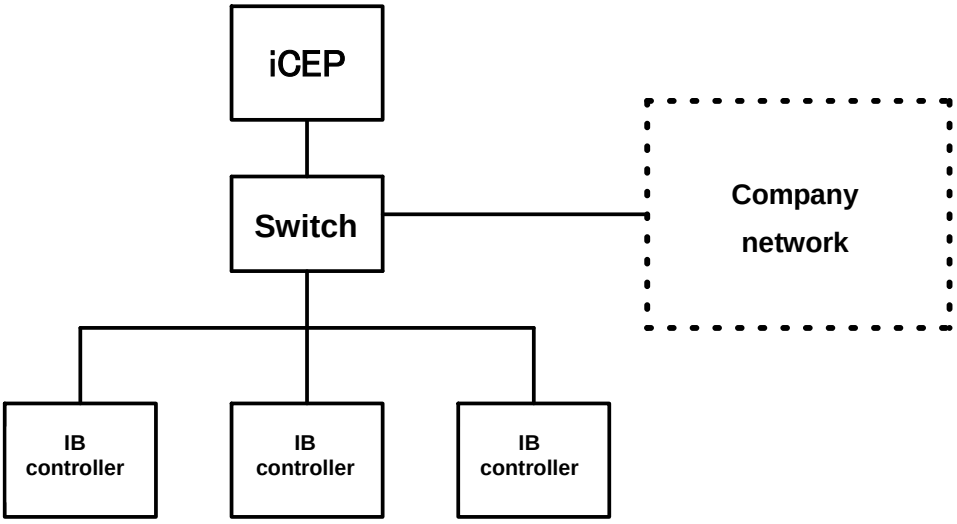

Communication between PC and IB controller (Firewall setting)

When iCEP connect to IB controller at first time, below message will be shown. Select “Allow access”.

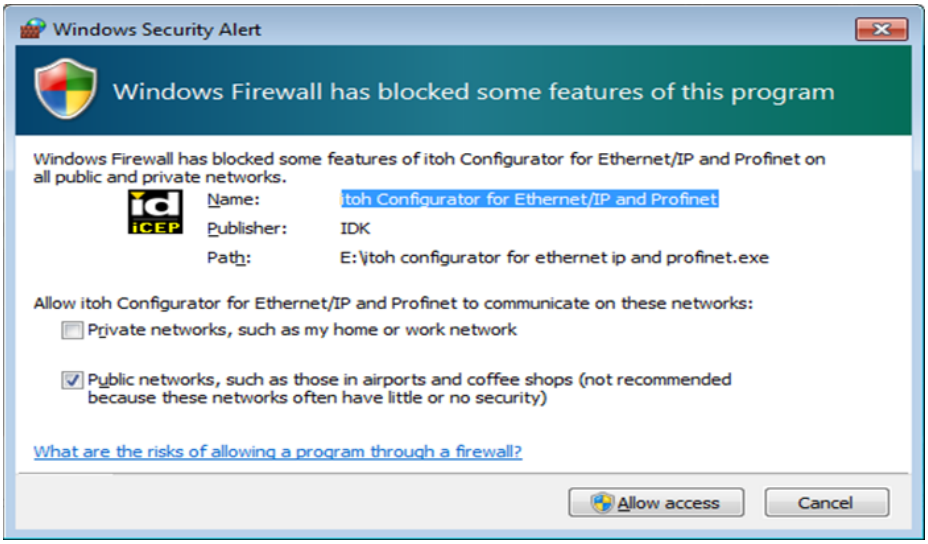

If Click of “Cancel” button, allows the iCEP connection from Firewall in “Control Panel” as shown below.

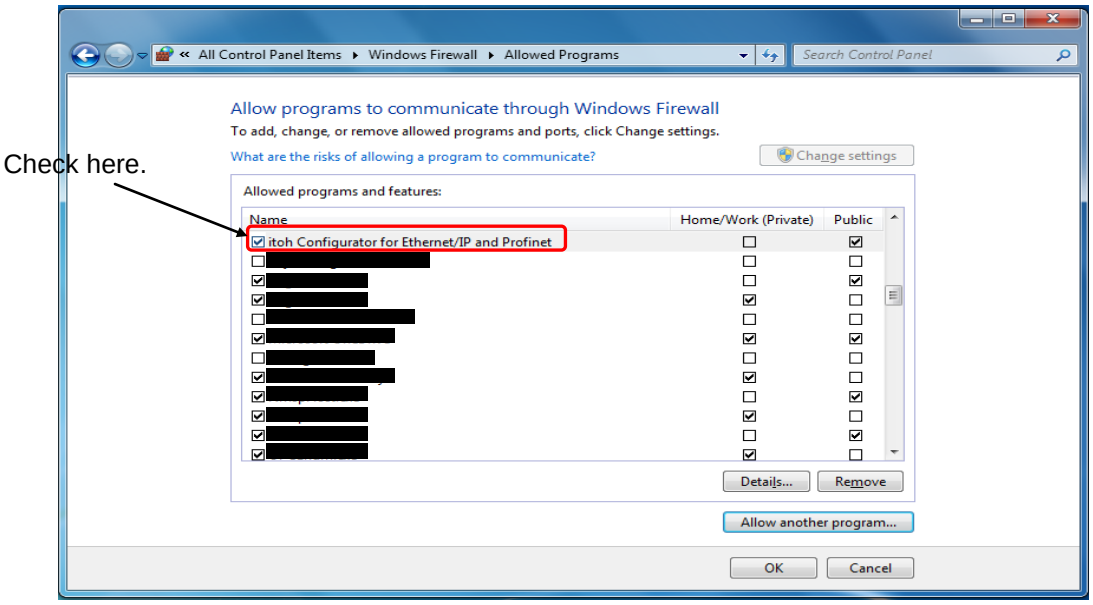

The functions cannot be used when disallow iCEP communication.

Functions	Symptom
Upload ladder logic	FtpPutFile Error 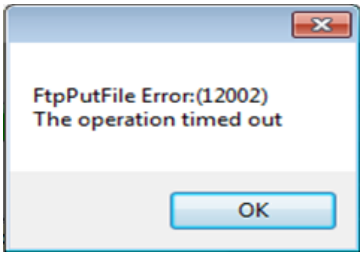
Logic monitor	Cannot be monitored
Speed / Current monitor	

*Open each port if set individually by security software.

Type	Port number	Detail
UDP	40002	Monitor (logic monitor, speed/current monitor, error information), Discovery (Find IP address)
TCP	50001	Download / Upload a property setting, Jog Control
FTP	20	Download ladder logic
FTP	21	